इंटरनेट मानक

Disclosure to Promote the Right To Information

Whereas the Parliament of India has set out to provide a practical regime of right to information for citizens to secure access to information under the control of public authorities, in order to promote transparency and accountability in the working of every public authority, and whereas the attached publication of the Bureau of Indian Standards is of particular interest to the public, particularly disadvantaged communities and those engaged in the pursuit of education and knowledge, the attached public safety standard is made available to promote the timely dissemination of this information in an accurate manner to the public.

"जानने का अधिकार, जीने का अधिकार"
Mazdoor Kisan Shakti Sangathan
"The Right to Information, The Right to Live"

"पुराने को छोड नये के तरफ"
Jawaharlal Nehru
"Step Out From the Old to the New"

IS 6787 (1973): Plate, Bone, McLaughlin [MHD 2: Orthopaedic Instruments, Implants and Accessories]

"ज्ञान से एक नये भारत का निर्माण"
Satyanarayan Gangaram Pitroda
"Invent a New India Using Knowledge"

Act Number 22 of 2005
The Indian Parliament
RIGHT TO INFORMATION

Made Available By
Public.Resource.Org

"ज्ञान एक ऐसा खजाना है जो कभी चुराया नहीं जा सकता है"
Bhartṛhari—Nītiśatakam
"Knowledge is such a treasure which cannot be stolen"

BLANK PAGE

BRUTUM FULMEN

IGNORANTIA JURIS NON EXCUSAT

PROTECTED BY COPYRIGHT

AMENDMENT NO. 1 NOVEMBER 1982

TO

IS : 6787 - 1973 SPECIFICATION FOR PLATE, BONE, McLAUGHLIN

Alteration

(*Page* 1, *Fig.* 1) — Substitute the following for the existing figure:

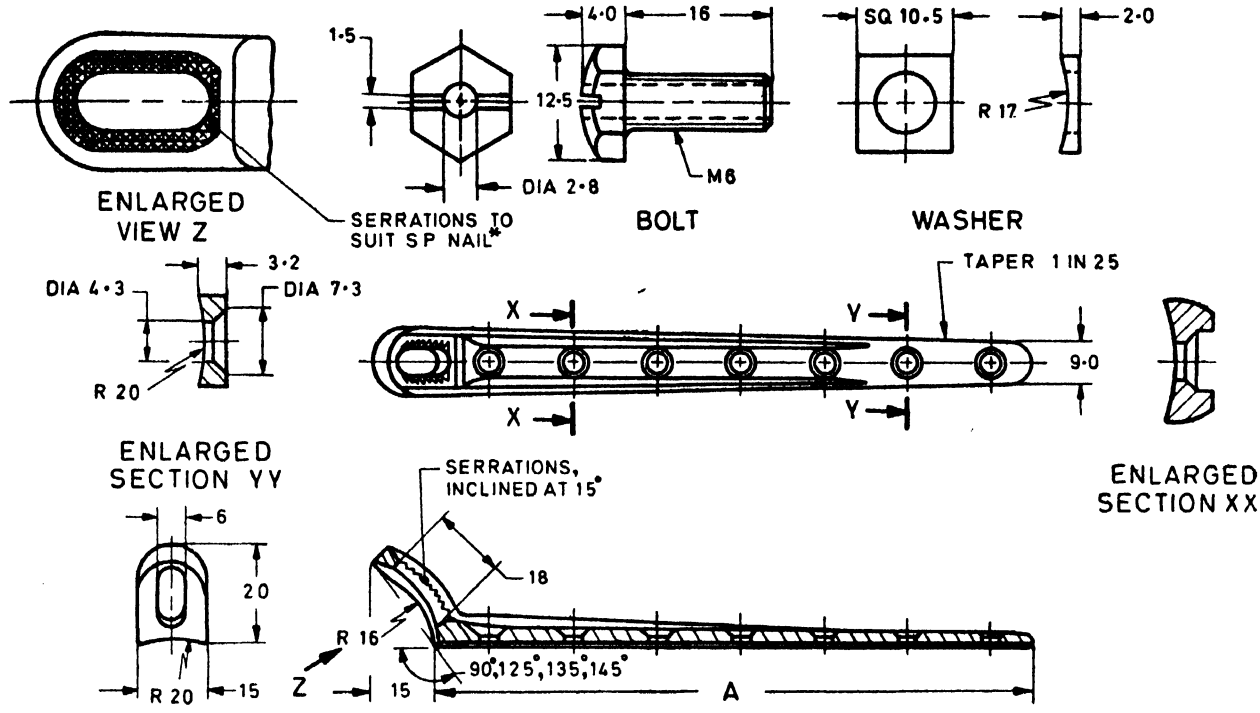

A	*No. of Holes*
75	3
90	4
125	6
150	7

**See* IS : 5846-1970 'Specification for nails, bone (Smith Petersen and Watson Jones patterns)'.

All dimensions in millimetres.

FIG. 1 BONE PLATE McLAUGHLIN

Addendum

(*Page* 1, *clause* **3**) — Add the following new clause after **3**:

'**3.1** Deviation of ± 2·5 percent shall be permitted on all dimensions except where otherwise specified.'

(CPDC 24)

Printed at New India Printing Press, Khurja, India

Indian Standard

SPECIFICATION FOR PLATE, BONE, McLAUGHLIN

Orthopaedic Instruments and Accessories Sectional Committee, CPDC 24: Implants and Accessories Subcommittee, CPDC 24: 1 [Ref: Doc: CPDC 24 (666)]

1. Scope—Dimensional and other requirements of McLaughlin bone plates used as an implant in orthopaedic surgery.

2. Material—Any of the materials specified in 3 of IS: 5347-1969 'General requirements of metal surgical implants'.

3. Shape and Dimensions—As shown in Fig. 1.

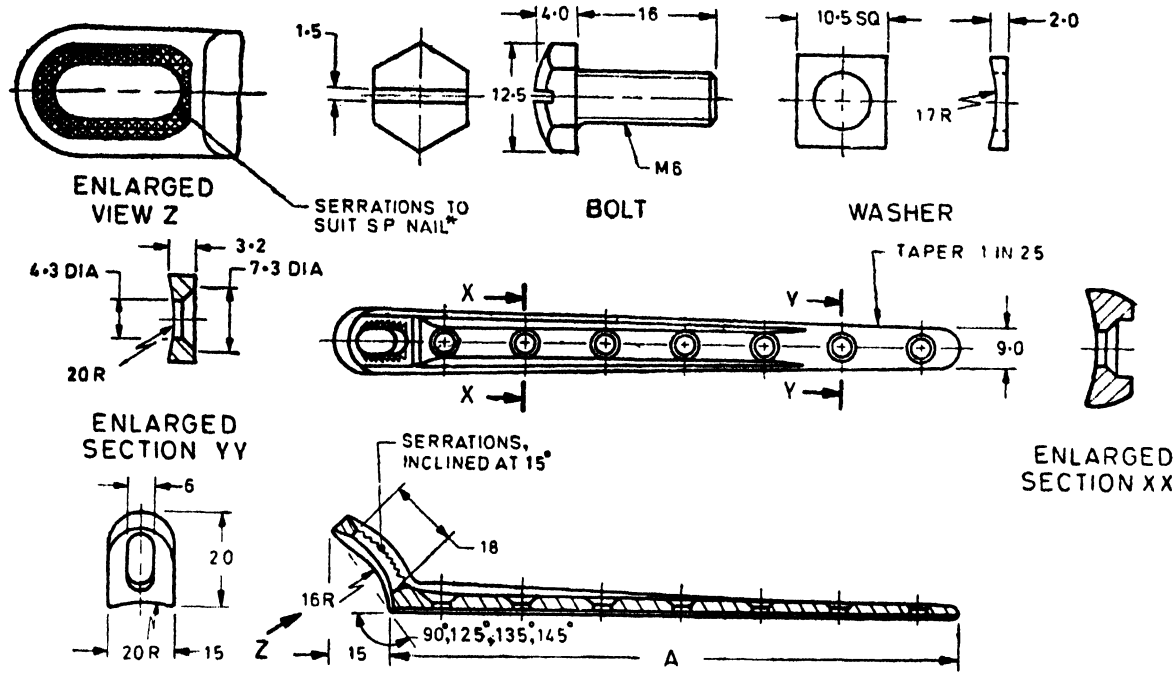

A	No. of Holes
75	3
90	4
125	6
150	7

*See IS: 5846-1970 'Specification for nails, bone (Smith Petersen and Watson Jones patterns).

All dimensions in millimetres.

FIG. 1 PLATE, BONE, McLAUGHLIN

4. Manufacture, Workmanship and Finish

4.1 The plates shall be made in one piece to give the required shape.

4.2 The holes shall be well-made and uniformly situated on the central line of the plate.

4.3 The tongue shall have serrations on both the sides to hold the nail firmly.

4.4 The bolt shall have clean and well-formed threads.

4.5 All sharp edges shall be removed.

4.6 The bone plate, the bolt and the washer shall be free from pits, cracks, burrs, blemishes and other surface defects.

Adopted 15 January 1973 © March 1973, ISI [redacted]

INDIAN STANDARDS INSTITUTION
MANAK BHAVAN, 9 BAHADUR SHAH ZAFAR MARG
NEW DELHI 1

[redacted]

4.7 The plate, the bolt and the washer shall be passivated and polished bright.

4.8 Screw shall fit in the plate holes perfectly and there shall be no protruding edges of the screws.

4.9 Smith Petersen nail used with McLaughlin plate shall be in accordance with IS : 5846-1970.

5. Tests

5.1 *Corrosion Resistance Test* — Shall be according to **6.1** of IS : 5347-1969.

5.2 *Radiological Test* — Shall be according to **6.2** of IS : 5347-1969.

6. Marking — Shall be according to **5.1** of IS : 5347-1969.

6.1 *ISI Certification Marking* — Details available from the Indian Standards Institution, New Delhi 1.

7. Packing — The plates may be packed as agreed to between the purchaser and the supplier. However, it is recommended that each plate, bolt and the washer may be wrapped in polyethylene bag or in wax paper and then packed in cartons.

Printed at Printograph, New Delhi 5, India